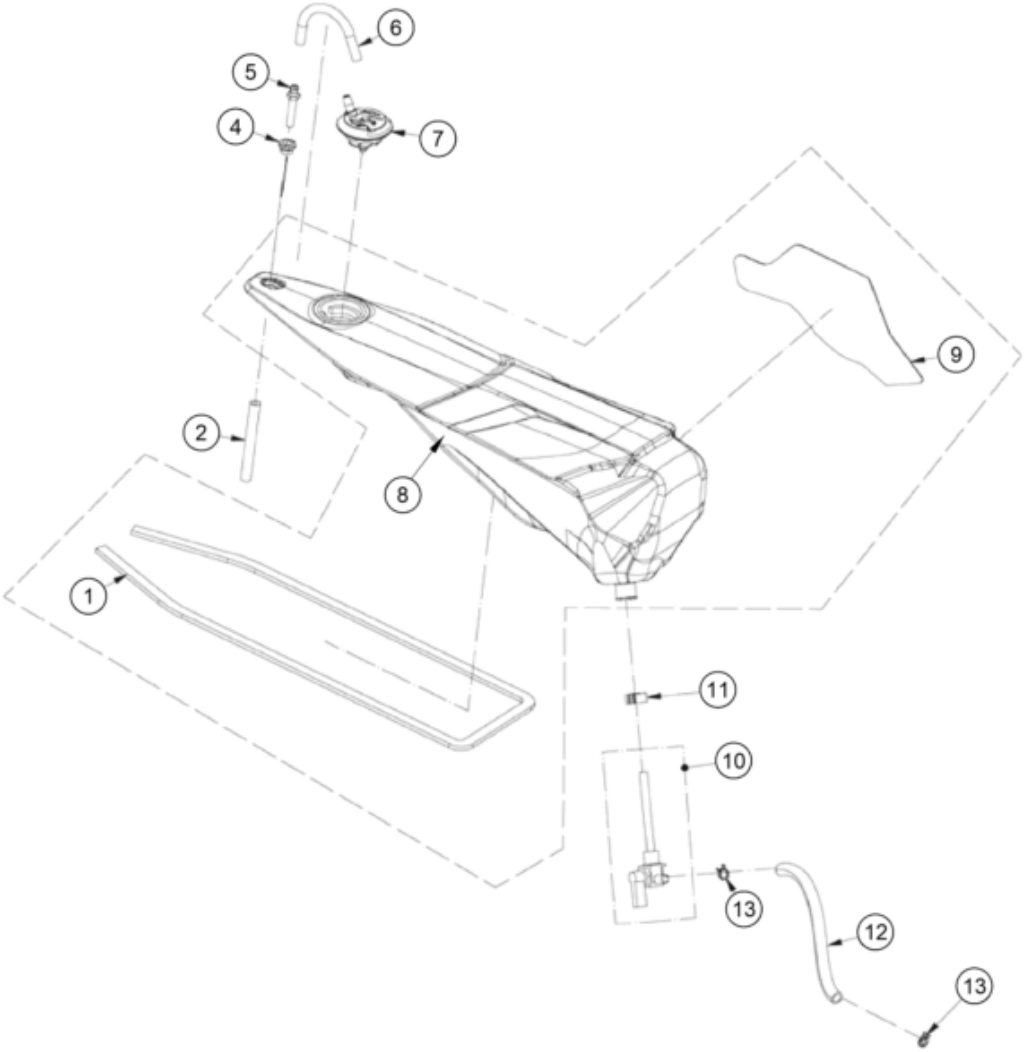

Pos	Part Number	Description	Additional Text	Quantity
1	BT80000093012	Rubber cover		1.00
2	BT80000063012	Breather tube		1.00
4	BT761053013	Bushing fuel tank		1.00
5	BT80000033012	Bolt tank		1.00
6	BT80000073012	Vent hose		1.00
7	BT80000053012	Tank plug		1.00
8	BT76000CT-CYY-1	Fuel tank with sticker	with sticker	1.00
8	BT760013013CT	Fuel Tank without decal		1.00
9	BT960303013	Heat protection fuel tank		1.00
10	BIT50010031	Fuel cock		1.00
11	BIT50010033	Clamp 17mm INOX A2		1.00
12	BT780053013	Fuel tube		1.00
13	L200036	Spring 9,3x9,9		2.00