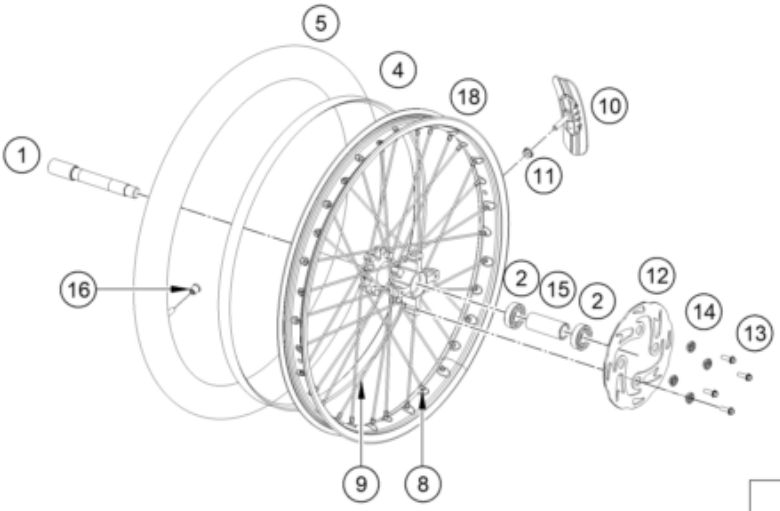

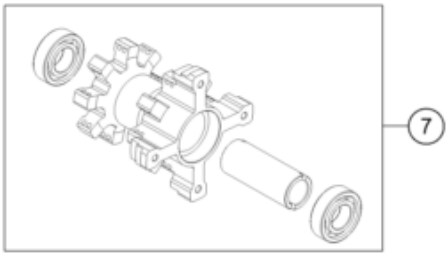

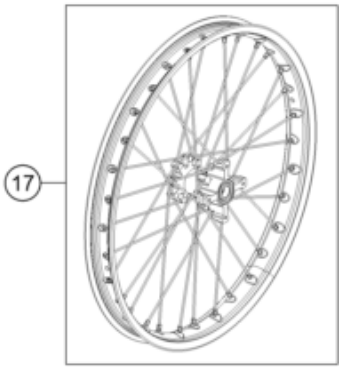

Pos	Part Number	Description	Additional Text	Quantity
1	BT53000GG-CJT-1	Axle front wheel		1.00
2	C160001	Bearing 20x26x16		2.00
4	BE25618028	Rim band		1.00
4	BE503002511	FRONT RIM BAND 1.60 1.85x21		1.00
5	BE502002511	FRONT AIR HOSE 21		1.00
7	BT54110CT-CDD-1	Front wheel hub		1.00
8	BT27718001	Spoke nipple 3mm		32.00
9	BT54200N2809	Spoke front black		32.00
10	BE505002509	Tire holder		1.00
11	T2208001	Flange nut M8		1.00
12	BT52000GG-CGS-1	Brake disk front		1.00
13	T0206020	Screw 6x20 DIN 6921 GEOMET 10.		4.00
14	BT27918019	Bushing		4.00
15	BT54115GG-CDD-1	Bearing distance tube		1.00
16	BT53500R3009	Valve cap		1.00
17	BT54000CT-CJD-1	Rim front txt racing 2015		1.00
18	BT50000003012	Front rim		1.00