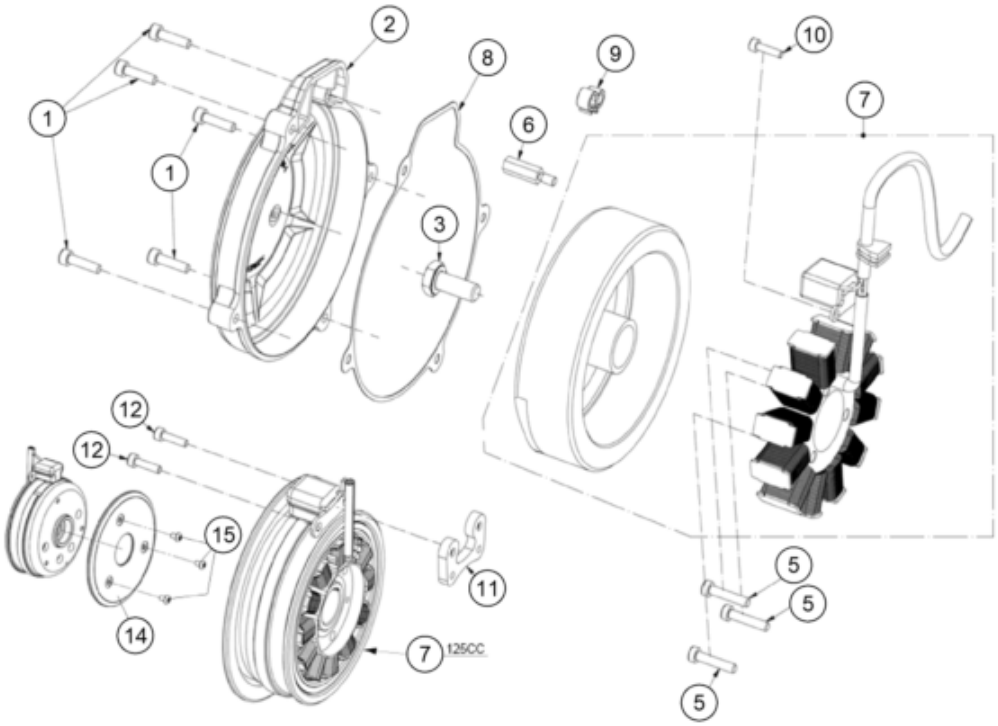


| Pos | Part Number | Description | Additional Text | Quantity |
|---|---|---|---|---|
| 1 | T0305020 | Screw 5x20 | | 5.00 |
| 2 | MT60000GG-CBN-1 | Ignition cover | | 1.00 |
| 3 | T02010025 | Screw 10x25 | | 1.00 |
| 5 | T0305025 | Screw 5x25 | | 3.00 |
| 6 | ET70220GG-CBN-1 | Screw | | 1.00 |
| 7 | ET70000CT-CSZ-1 | CTO. ROTOR ENCENDIDO RACING TX | 125cc | 1.00 |
| 7 | ET70000CT-CKW-1 | Ignition cpl. | 250cc/280cc/300cc | 1.00 |
| 8 | MT280344004 | Ignition cover gasket | | 1.00 |
| 9 | EE650202508 | Clip speedo cable holder | | 1.00 |
| 10 | T0305010 | Screw 5x10 | | 1.00 |
| 11 | MT70215GG-CGC-1 | Holder | 125cc | 1.00 |
| 12 | T0305010 | Screw 5x10 | | 2.00 |
| 14 | ET70125GG-CGC-1 | Flywheel Ignition | | 1.00 |
| 15 | T0455008 | Screw 5x8 | | 3.00 |