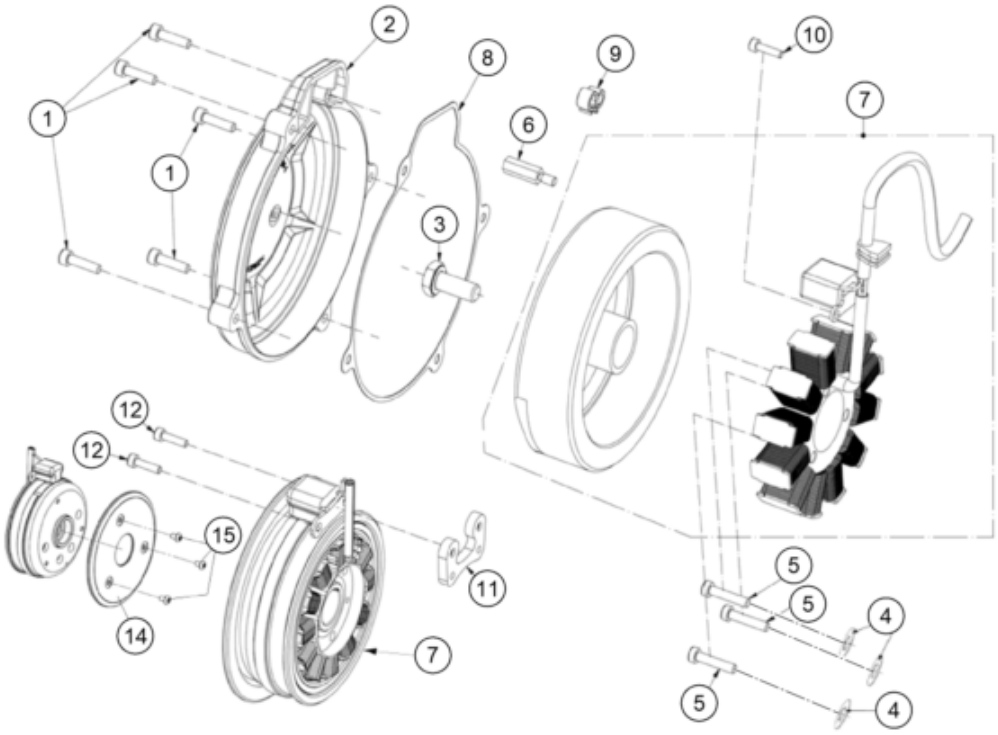

Pos	Part Number	Description	Additional Text	Quantity
1	T0305020	Screw 5x20		5.00
2	MT60000GG-CBN-1	Ignition cover		1.00
3	T02010025	Screw 10x25		1.00
4	T4005010	Washer 10x5x1 DIN 125 Zinc		3.00
5	T0305025	Screw 5x25		3.00
6	ET70220GG-CBN-1	Screw		1.00
7	ET70000CT-CSZ-1	CTO. ROTOR ENCENDIDO RACING TX	125cc	1.00
7	ET70000CT-CKW-1	Ignition cpl.	250cc/280cc/300cc	1.00
8	MT280344004	Ignition cover gasket		1.00
9	EE650202508	Clip speedo cable holder		1.00
10	T0305010	Screw 5x10		1.00
11	MT70215GG-CGC-1	Holder	125cc	1.00
12	T0305010	Screw 5x10		2.00
14	ET70125GG-CGC-1	Flywheel Ignition		1.00
15	T0455008	Screw 5x8		3.00