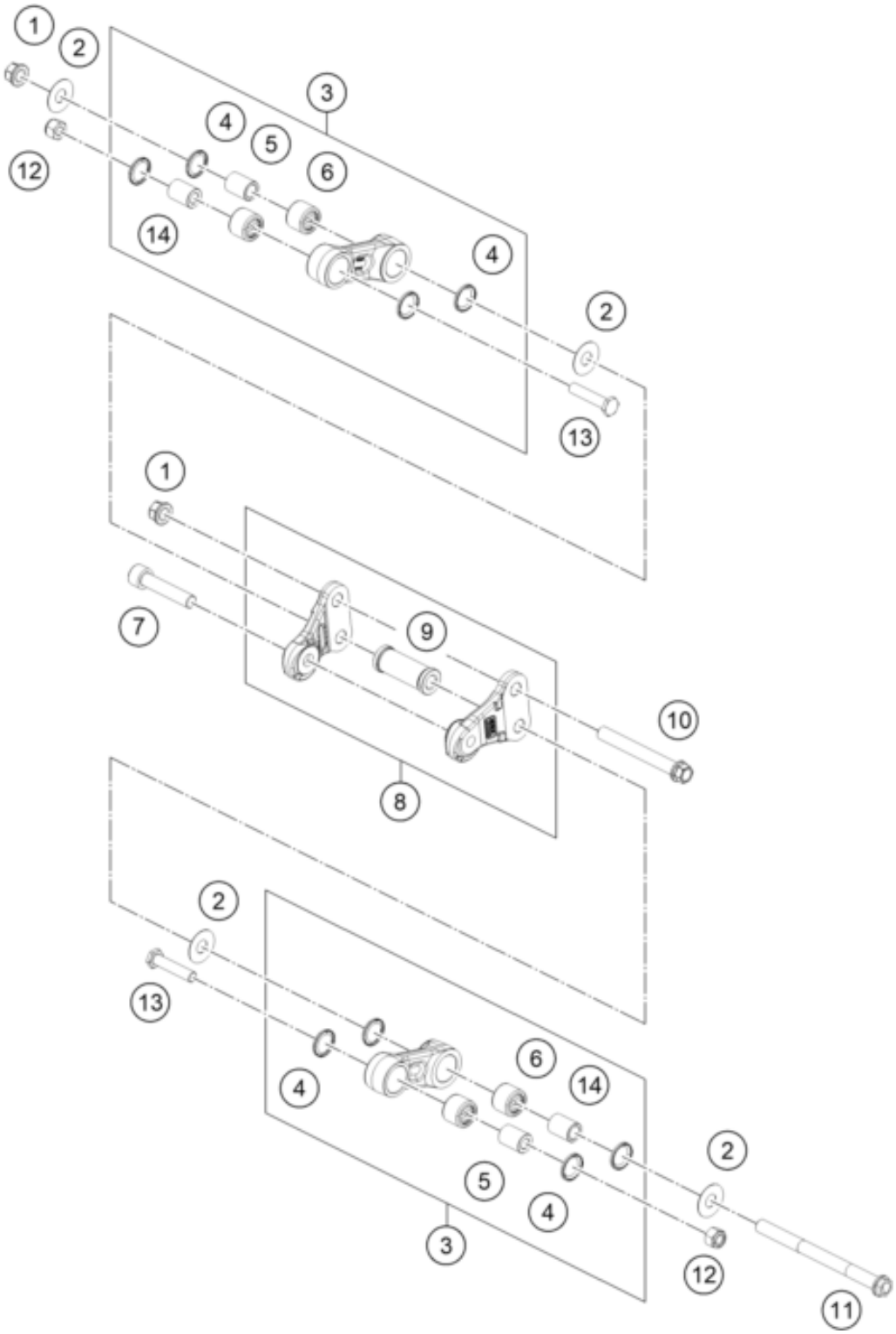

Pos	Part Number	Description	Additional Text	Quantity
1	54630044000	COLLAR NUT M10 WS=13		2.00
2	T4001026	Washer 10,5,x26x0,5		4.00
3	A53504083044	Pull rod cmpl.		2.00
4	C230001	Gasket 15x21x2		8.00
5	BT27712005	Bushing Linking 10mm		2.00
6	BT27714009	Bearing		4.00
7	0900001004800	Set screw w.hexagon socket M10		1.00
8	A53504080044	Triangle cantilever cpl.		1.00
9	BT32100R3009	Bushing		1.00

10	09000010080U0S	Special collar screw M10x80		1.00
11	BT35000003012	Special screw		1.00
12	T2108002	Nut 8mm DIN 982		2.00
13	T0118038	Screw 8x38		2.00
14	BT27712014	Bushing Linking 8mm		2.00