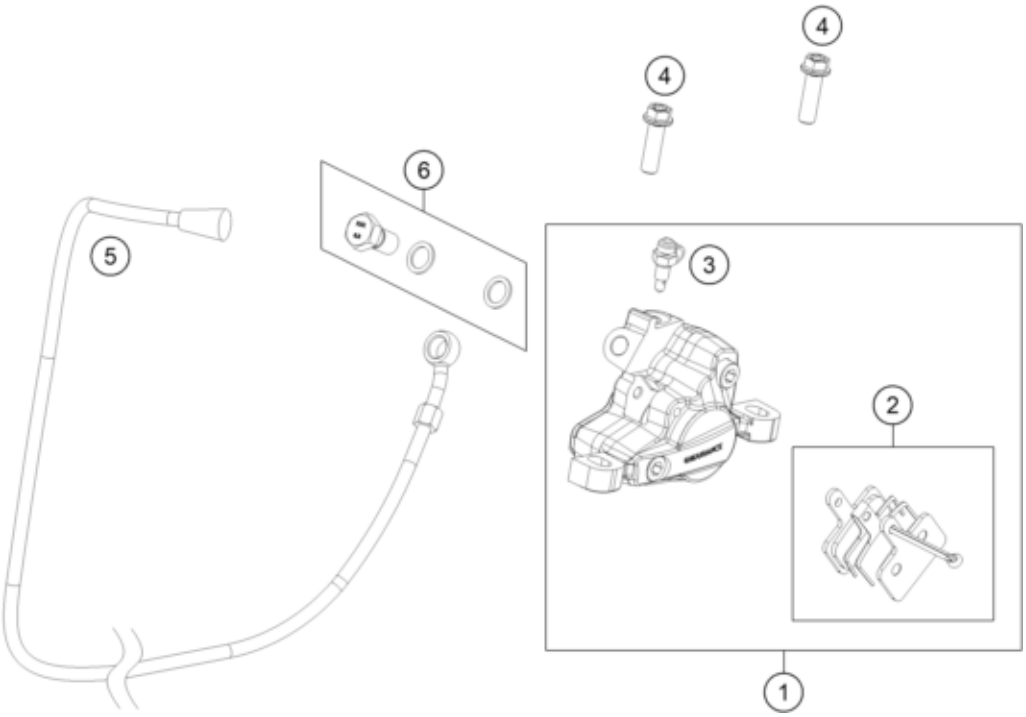

Pos	Part Number	Description	Additional Text	Quantity
1	A90113015044	BRAKE CALIPER REAR CPL		1.00
2	A90113030044	Brake pad set cpl.		1.00
3	A90113020000	bleeder screw with cap		1.00
4	0025060206S	HH collar screw M6x20 TX30		2.00
5	A90142003044	BRAKE PIPE		1.00
6	A90113025000	Banjo bolt ;8X0,75		1.00